THREE-PIECE FORGED STEEL BALL VALVES

Master Star

& Super Star forged steel ball valves

Starline three-piece bolted ball valves with solid ball, soft seats and an ISO 5211 top for easy automation – in threaded, welded and flanged ends.

- Anti blow-out proof stem
- Antistatic device
- Fire test approved
- Super Star: encapsulated seats to Class 900

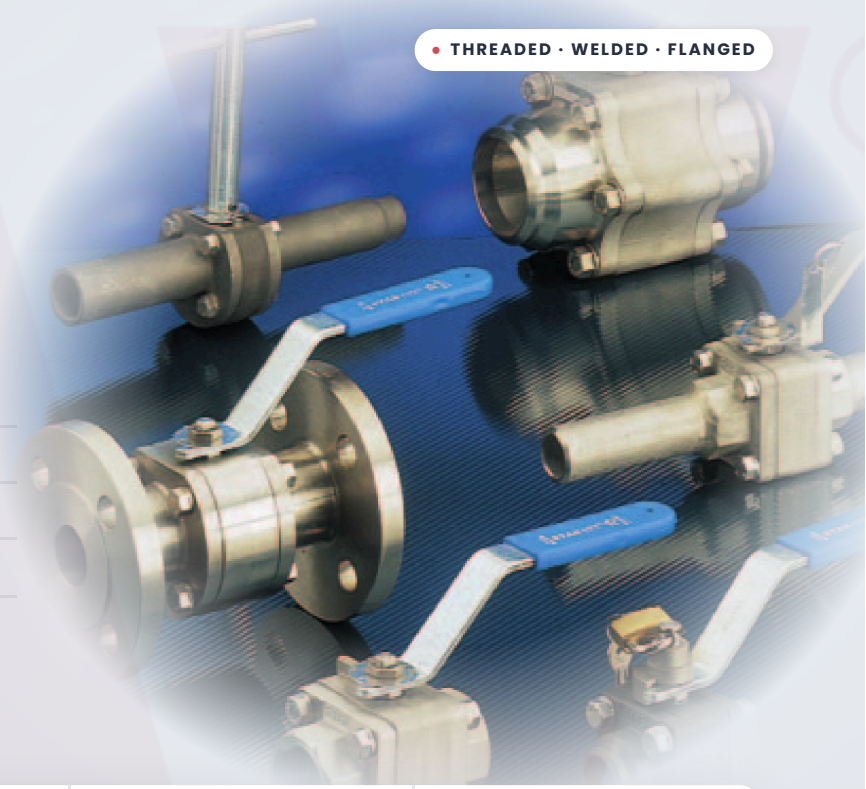

DN8–80	ASME 900	-200 °C	ISO 5211
SUPER STAR FULL BORE	MAX CLASS · SUPER STAR	MINIMUM TEMPERATURE	TOP FOR AUTOMATION

Two series. One build system.

THREE-PIECE BOLTED · SOLID BALL

Master Star

Three-piece forged steel ball valve with soft seats

Full bore	DN8–40 · 1/4″–1.1/2″
Reduced bore	DN15–50 · 1/2″–2″
Class	PN16–100 · ASME 150–800
Temperature	-200 °C to +260 °C
Seats	T · R · S · B · U
Bolts	4 + 4

Super Star

Three-piece forged steel ball valve with encapsulated soft seats

Full bore	DN8–80 · 1/4″–3″
Reduced bore	DN15–100 · 1/2″–4″
Class	PN16–150 · ASME 150–900
Temperature	-200 °C to +450 °C
Seats	T · R · S · B · U · N · P · E · Z
Bolts per side	4, 6 or 8 by size

SERVICES & SPECIAL SERVICE VERSIONS

Petroleum · **Chemicals** · **Petrochemicals** · **Allied industries** · Oxygen gas · Dry, liquid & gaseous chlorine · Cryogenic – helium leak test · Vacuum · Food service · Slurry · Abrasive media · High temperature · NACE (H_2S) · Hydrogen peroxide

PED 97/23 EC — CE 0038 — Certificate N°: RPS 0160304/01
ATEX 94/9 CE — Ex — Tech. File N° ST01 ATEX

SUPPLIED & SUPPORTED IN THE UK BY
Actuation Valve & Control Ltd
actuation.co.uk

SUPER STAR EXPLODED VIEW

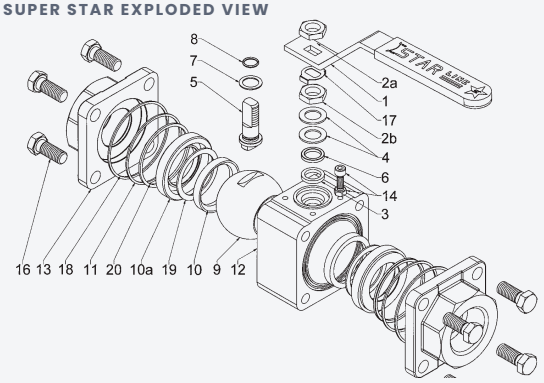

Description.

MASTER STAR · SUPER STAR

Construction	Three-piece bolted · solid ball · anti blow-out proof stem · soft seats (Super Star: encapsulated) · antistatic device · ISO 5211 top · fire test approved
Design	ASME B16.34 · ASME B31.1 · BS 5351 · API 6D · PED 97/23/EC · ATEX 94/9 CE
Marking	MSS SP25
CE 0038	Directive 97/23/CE – Module H, Category III – notified body Lloyd's Register
Ex I M2 / II 2GD	ATEX 94/9 CE – technical file ST01 ATEX
Test certificate	UNI EN 10204 type 3.1B unless otherwise required
Materials	ASTM A105 · LF2 · 316 · 316L and special materials

Construction & materials.

• SPARE AFTER 2 YEARS · •• SPARE AFTER 5 YEARS

Item	Qty	Part name	A105/F316	LF2/F316	F316/F316	Series
1	1	Handle	C.S. galvanised – plastic cover	C.S. galvanised – plastic cover	C.S. galvanised – plastic cover	Both
2A/2B ••	2	Nut	C.S. cadmium plated	C.S. cadmium plated	S.S. 316	Both
3 •	1	Packing ring	Graphite	Graphite	Graphite	Both
4 ••	2	Spring washer	Special S.S.	Special S.S.	Special S.S.	Both
5 ••	1	Antistatic stem	S.S. 316	S.S. 316	S.S. 316	Both
6	1	Gland packing	S.S. 316	S.S. 316	S.S. 316	Both
7 •	1	Thrust washer	Reinf. PTFE	Reinf. PTFE	Reinf. PTFE · Super Star: PTFE	Both
8 •	1	O-ring stem	Viton	Viton	Viton	Both
9 ••	1	Ball	S.S. 316	S.S. 316	S.S. 316	Both
10 •	2	Seats	T-R-S-B-U	T-R-S-B-U	T-R-S-B-U	Master Star
10 •	2	Seats	T-R-S-B-U-N-P-E-Z	T-R-S-B-U-N-P-E-Z	T-R-S-B-U-N-P-E-Z	Super Star
11 •	2	Body seal	T-S-V-G	T-S-V-G	T-S-V-G	Both
12	1	Body	ASTM A105N	A350 LF2	A182 F316	Both
13	2	End connections	ASTM A105N	A350 LF2	A182 F316L	Both
14	1	Stop-pin	S.S. 304	S.S. 304	S.S. 304	Both
16	8/16 [2]	Bolts	ASTM A193-B7 galvanised	ASTM A193-B8	ASTM A193 B8	Both
17 ••	1	Stop washer	S.S. 304	S.S. 304	S.S. 304	Both
18 •	2	Body seal	Graphite	Graphite	Graphite	Both
19	2	Seat seal	Graphite – Virgin PTFE	Graphite – Virgin PTFE	Graphite – Virgin PTFE	Super Star
20	2	Ring seal	Graphite – T – S	Graphite – T – S	Graphite – T – S	Super Star
10A	2	Ring seat	ASTM A105N *	A350 LF2	A182 F316	Super Star

* Printed "ASMA 105N" in the source. [2] Bolt quantity: Master Star 8; Super Star 8, 12 or 16 by size (4, 6 or 8 bolts per side). Seat and seal letters refer to the ordering codes below.

How to order.

EXAMPLE: 1/2" NPT 800 LBS 233-TGT.G

1 — PORT DESIGN

- 1 Full bore
- 2 Reduced bore

2 — TYPE OF VALVE

- 3 Master Star
- 1 Super Star

3 — BASE MATERIAL BODY/TRIM

- 1 321/316
- 2 A105/Monel
- 3 A105/316
- 4 F44/F44
- 5 LF2/316
- 6 316/316
- 7 316L/316L
- 8 Monel/Monel
- 9 F51/F51
- 0 All different

4 — INSERT SEAT MATERIAL

- T Virgin PTFE
- R PTFE + 15% fibreglass
- S PTFE + 25% carbographite
- B PTFE + 60% bronze
- U UHMWPE polyethylene
- N Devlon V polyamide-nylon [1]
- P PEEK [1]
- E Vespel SP21 polyimide [1]
- Z Tefzel ETFE (704-25) [1]

5 — STEM PACKING

- G Graphite
- T Virgin PTFE
- R PTFE + 15% fibreglass
- S PTFE + 25% carbographite

6 — FIRST BODY SEAL

- T Virgin PTFE
- S PTFE + 25% carbographite
- V O-ring Viton
- G Graphite

[1] Super Star only. The code is punched on the nameplate; size, rating and connections are not in the code and must be stated on every order. Example 2: 2.1/2" BW 600 LBS 213-SGS.G – butt welding, reduced bore, A105 body, 316 trim, reinforced PTFE seals.

Data supplied by Starline and provided for reference only. Specifications may change without notice – please confirm details with Actuation Valve & Control before ordering.

Super Star dimensions.

MM · WEIGHTS KG

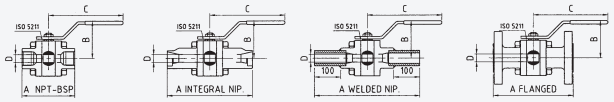

Full bore		A – overall length (mm)													Top	Weight (kg)						
DN	in	NPT · BSP	Integral BW · SW	Welded BW-PE	PN16–40	150 RF	150 RJ	300 RF	300 RJ	600 RF	600 RJ	B	C	D	ISO 5211	NPT · BSP	Integral	Welded	PN	150	300	600
8	**1/4"**	75	236	275	-	-	-	-	-	-	-	67	152	11.1	**F03**	1.1	1.5	1.2	-	-	-	-
10	**3/8"**	75	236	275	-	-	-	-	-	-	-	67	152	11.1	**F03**	1	1.5	1.2	-	-	-	-
15	**1/2"**	80	239	280	130	140	-	140	151.5	165	163.5	70	152	14.2	**F03**	1.3	1.7	1.6	3.2	3	3.4	4.1
20	**3/4"**	100	250	300	150	152	-	152	165	191	191	80	193	20.5	**F04**	2.3	3	2.7	4.7	4.4	5.2	5.9
25	**1"**	110	261	310	160	165	178	165	178	216	216	92	193	25.4	**F04**	3.2	4.3	3.9	6	5.5	7	7.8
32	**1.1/4"**	120	272	320	180	178	191	178	191	229	229	108	225	31.7	**F05**	4.3	5.5	5.1	8.4	7.2	10	10.8
40	**1.1/2"**	140	279	340	200	191	203.5	191	203	241	241	113	225	38	**F05**	5.8	7.2	6.8	10.5	9.5	13	15
50	**2"**	141	191	-	230	216	229	216	229	292	295	118	225	49	**F05**	10	10	-	17.5	16.5	19	21
65	**2.1/2"**	170	210	-	290	241	254	241	254	333	349	136	450	62	**F07**	13.5	13.5	-	23	22.5	25	28
80	**3"**	305	305	-	310	283	296	283	296	-	-	150	450	76	**F07**	26	26	-	28.5	35	38	-

Reduced bore		A – overall length (mm)													Top	Weight (kg)						
DN	in	NPT · BSP	Integral BW · SW	Welded BW-PE	PN16–40	150 RF	150 RJ	300 RF	300 RJ	600 RF	600 RJ	B	C	D	ISO 5211	NPT · BSP	Integral	Welded	PN	150	300	600
15	**1/2"**	75	236	275	130	108	-	140	151.5	165	163.5	67	152	11.1	**F03**	1	1.4	1.3	2.8	2.6	3	3.8
20	**3/4"**	80	239	280	150	117.5	-	152	165	191	191	70	152	14.2	**F03**	1.2	1.7	1.6	3.5	3.2	4	4.8
25	**1"**	100	250	300	160	127	140	165	178	216	216	80	193	20.5	**F04**	2.2	3	2.8	5	4.4	5.8	6.8
32	**1.1/4"**	110	261	310	180	140	152.5	178	191	229	229	92	193	25.4	**F04**	3.1	4.3	4	7	6	8.5	9.5
40	**1.1/2"**	120	272	320	200	165	178	191	203	241	241	108	225	31.7	**F05**	4.2	5.5	5.2	9	8	11.5	13.5
50	**2"**	140	279	340	230	178	191	216	232	292	295	113	225	38	**F05**	5.5	7.2	6.8	11.5	11	14	17
65	**2.1/2"**	141	191	-	290	191	203	241	254	333	349	118	225	49	**F05**	9	9	-	14	15.5	18	20
80	**3"**	170	210	-	310	203	216	283	296	356	372	136	450	62	**F07**	12	12	-	20	21	24	26.5
100	**4"**	229	305	-	350	229	241	305	318	-	-	150	450	76	**F07**	20	28	-	24.5	26	29	-

Master Star dimensions and weights are identical for its sizes (DN8–40 full bore, DN15–50 reduced bore) without the Class 600 columns. Threaded ends: BSP parallel BS21 · DIN 259 · ISO R/228 · UNI 338; BSP taper BS21 · DIN 2999 · ISO R/7 · UNI 339; NPT ANSI B1.20.1. Welded: S.W. ASME/ANSI B16.11 · BS 5351; B.W.-P.E. ASME/ANSI B16.25 Sch. 5S-10S-40-80-XS; welded nipples ASME/ANSI B36.10 Sch. 10-40-80-XS. Flanged: ASME/ANSI B16.5, face to face ASME/ANSI B16.10; DIN 2633 PN16 · DIN 2634 PN25 · DIN 2635 PN40, face to face EN 558-1 basic series 1 (DIN 3202 F1). Other overall lengths on request.

Flow data.

KV M³/H AT 1 BAR · CV US GPM AT 1 PSI · WATER AT 15 °C, FULLY OPEN

Full bore									
Size	1/4"	3/8"	1/2"	3/4"	1"	1.1/4"	1.1/2"	2"	2.1/2"	3"
DN	8	10	15	20	25	32	40	50	65	80
Cv	8	8	12	30	45	78	115	265	445	680
Kv	6.8	6.8	10	26	38	67	99	227	381	583

Reduced bore									
Size	1/2"	3/4"	1"	1.1/4"	1.1/2"	2"	2.1/2"	3"	4"
DN	15	20	25	32	40	50	65	80	100
Cv	8	13	32	48	82	120	275	460	700
Kv	6.8	11	27.5	41	70	103	236	394	600

Top mounting & break-away torque.

NM AT MAX. WORKING PRESSURE

Full bore		Reduced bore		Top mounting dimensions (mm)									Torque
in	DN	in	DN	A	B	C	D	ØE	F	ØG	ØH	I	Nm
1/4"	**8**	–	–	M10x1	5.5	9	3.6	36	M5x8	25	21	1.5	**12**
3/8"	**10**	1/2"	15	M10x1	5.5	9	3.6	36	M5x8	25	21	1.5	**12**
1/2"	**15**	3/4"	20	M10x1	5.5	9.5	3.6	36	M5x8	25	21	1.5	**16**
3/4"	**20**	1"	25	M12x1.25	7.5	14	9	42	M5x8	30	25	1.5	**22**
1"	**25**	1.1/4"	32	M12x1.25	7.5	20	10	42	M5x8	30	25	1.5	**30**
1.1/4"	**32**	1.1/2"	40	M15x1.5	8.9	27	13	50	M6x10	35	30	1.5	**38**
1.1/2"	**40**	2"	50	M15x1.5	8.9	28	14	50	M6x10	35	30	1.5	**46**
2"	**50**	2.1/2"	65	M15x1.5	8.9	25	12.5	50	M6x10	35	30	1.5	**90**
2.1/2"	**65**	3"	80	M22x1.5	16	35	17	70	M8x12	55	48	1.5	**110**
3"	**80**	4"	100	M24x2	18	37.5	15	70	M8x12	55	48	1.5	**125**

Break-away torque with seats in PTFE + 25% C. graphite ("S"); for Virgin PTFE seats ("T") -5%. Many factors influence torque in service – apply Starline torque adjustment factors (table A003/94) when sizing an actuator.

Data supplied by Starline and provided for reference only. Specifications may change without notice – please confirm details with Actuation Valve & Control before ordering.

AV®

Want it automated?

We supply Master Star and Super Star valves with brackets and fitted pneumatic or electric actuators, ready to install.

actuation.co.uk